Sprague® DEVICES, INC.

POWER PLUS
CHALLENGER MOTORS

All *AIR-PUSH*® Motors Have Been Field Tested and are Proven Superior Performers

Engineered for vehicles with large windshield glass areas. Motor features non-corrosive die-cast aluminum body, aluminum piston and rack assembly. Just four moving parts for minimum wear. "O" ring air seals for maximum efficiency, air economy. Direct drive recommended generally for maximum of 16″ arms with 16″ medium-duty blades. Arc type sweep pattern. Additional power through linkage increases maximum to 20″ arms, 20″ blades. Arc or pantograph type sweep pattern.

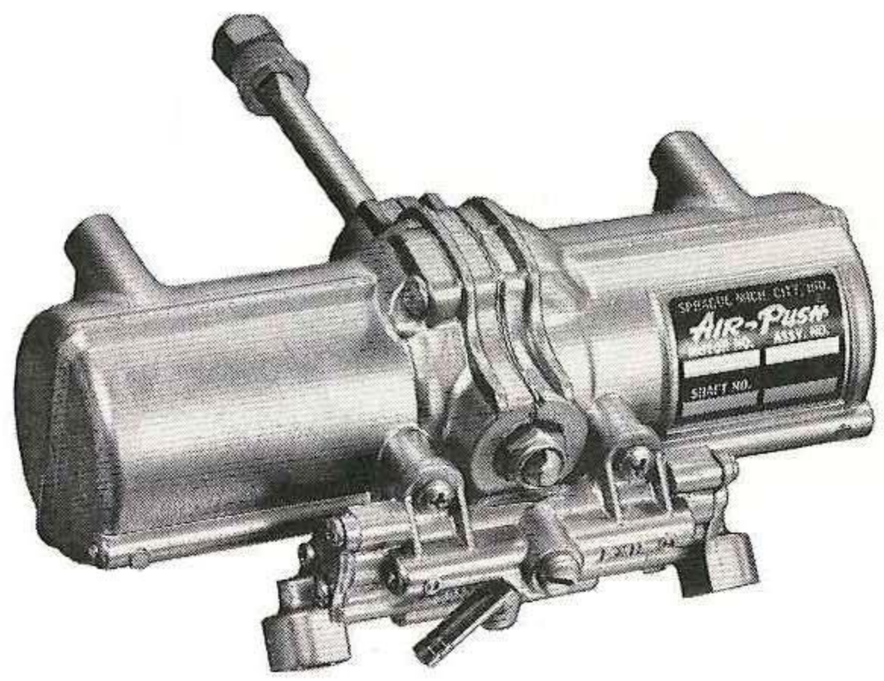

FEATURES

- **Smoother And Quieter Operation.**
- **Less Maintenance.**
- **Longer Life Due To Improved Cylinder Surfaces.**
- **More Road Time, Less Down Time.**

Bore:	1.500 in.
Air Consumption:	1.14 CFM at 80 psi.
Oscillation range:	35° to 140°
Torque (Calculated):	10.5 ft. lbs. at 100 psi.
Increase In Torque Through Linkage:	Approximately 50%
Weight:	2.5 lbs.
Operating Pressure:	30 to 100 psi.

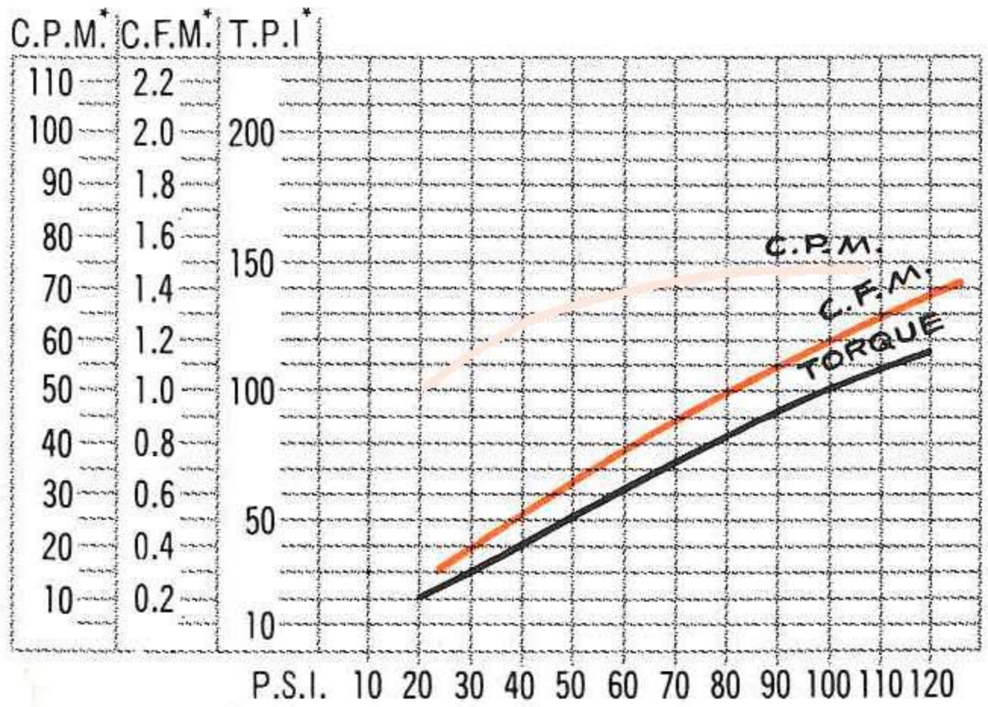
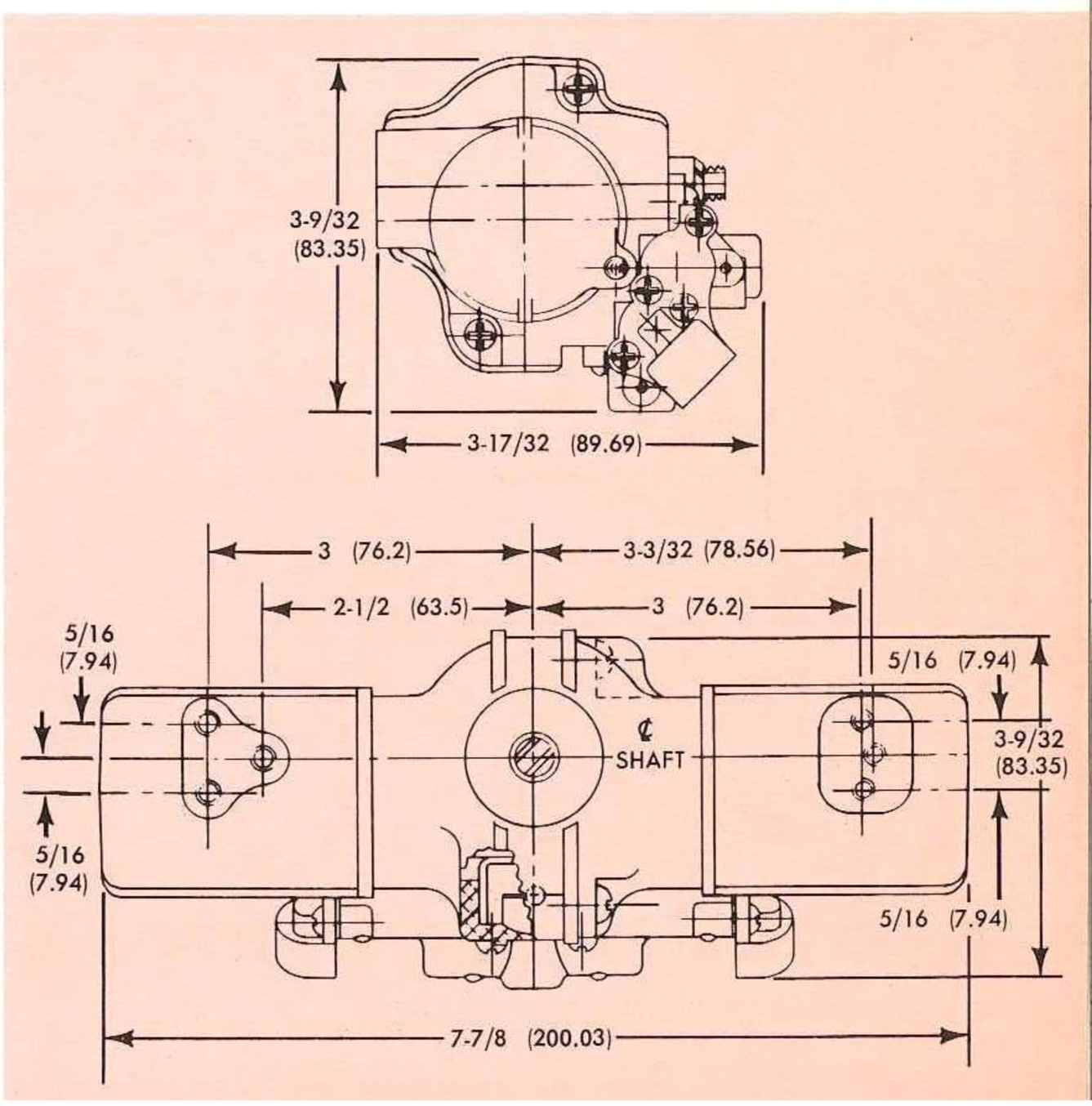
C.P.M. Speed — Cycles Per Minute
*C.F.M. Air Consumption — Cubic Feet Per Minute
*T.P.I. — Torque Pound Inches